EMEC
THE EUROPEAN MARINE ENERGY CENTRE LTD

Developers overview and deployments considerations

Florence Ungaro
Mechanical Engineer

© www.emec.org.uk

Orkney Clustering

EMEC
THE EUROPEAN MARINE ENERGY CENTRE LTD

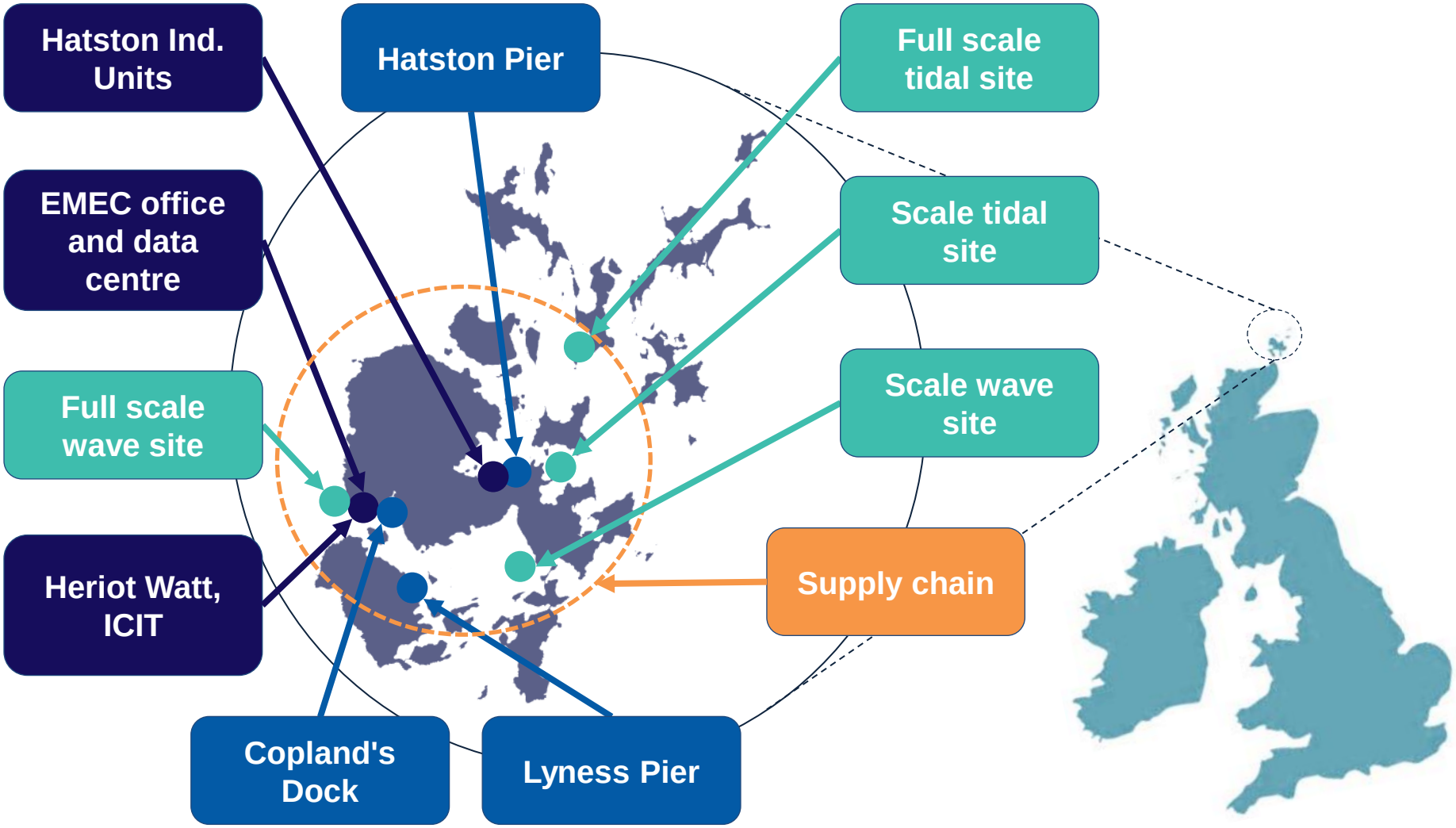

© www.emec.org.uk

EMEC

THE EUROPEAN MARINE ENERGY CENTRE LTD

32 devices • **20** developers • **11** countries

© www.emec.org.uk

Developer timeline

EMEC
THE EUROPEAN MARINE ENERGY CENTRE LTD

© www.emec.org.uk

PELAMIS

PELAMIS

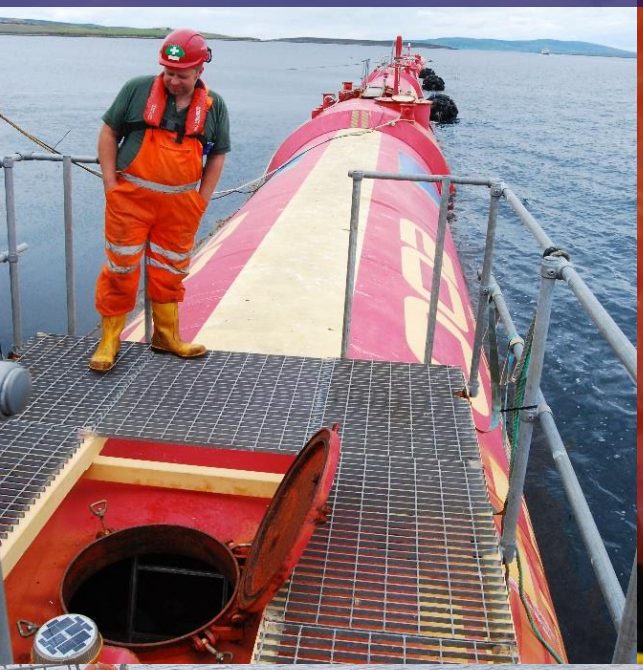

AQUAMARINE

WELLO

WELLO

CORPOWER

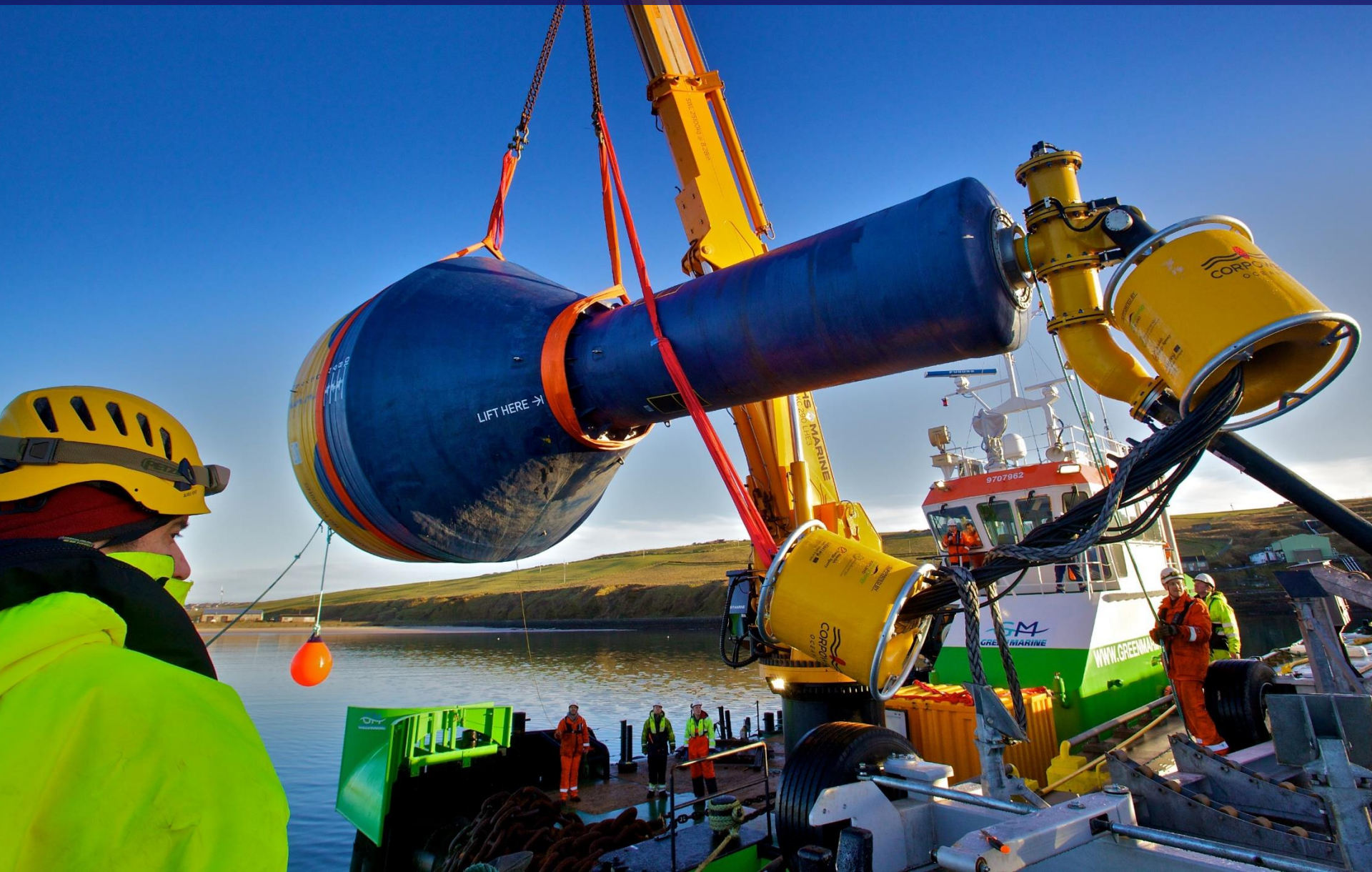

MICROGRID

EMEC MICROGRID

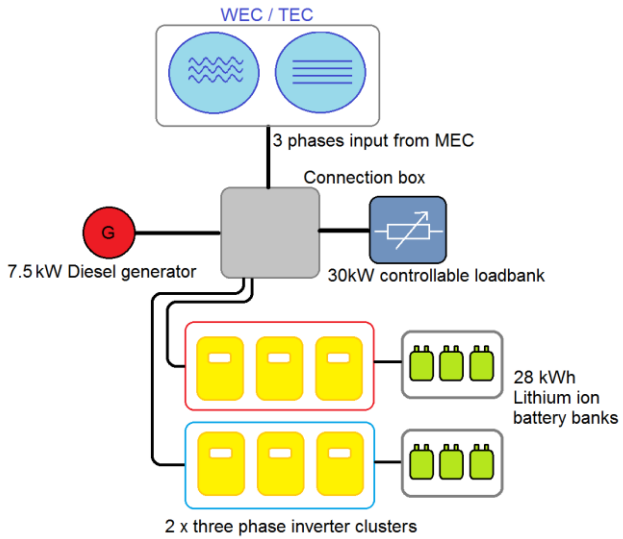
WEC / TEC
3 phases input from MEC
Connection box
G
7.5 kW Diesel generator
30kW controllable loadbank
28 kWh
Lithium ion
battery banks
2 x three phase inverter clusters

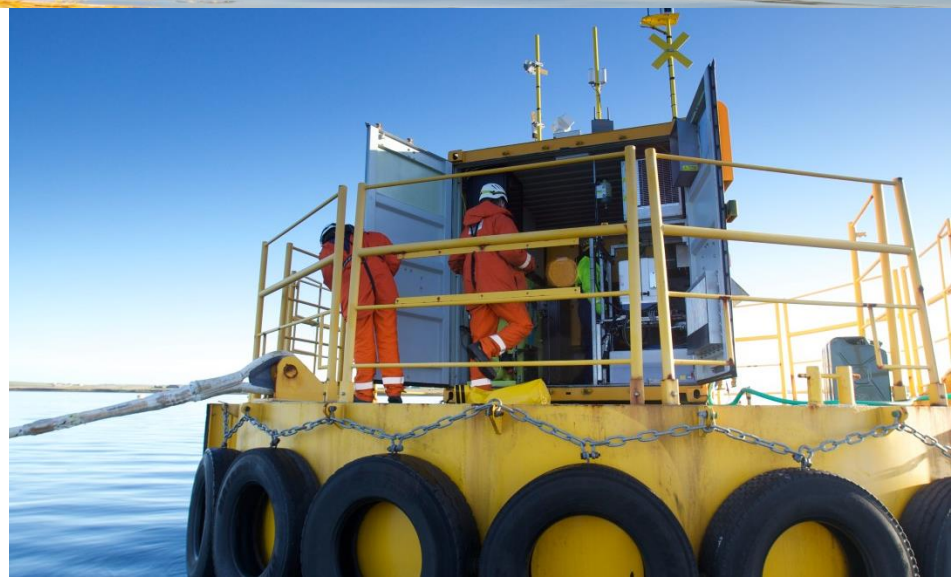

ORBITAL MARINE POWER

2010 | 1/5TH SCALE

2011-13 | SR250

2021 | ORBITAL 02

2016-18 | SR1-2000

Orbital O2

EMEC
THE EUROPEAN MARINE ENERGY CENTRE LTD

Operational mode

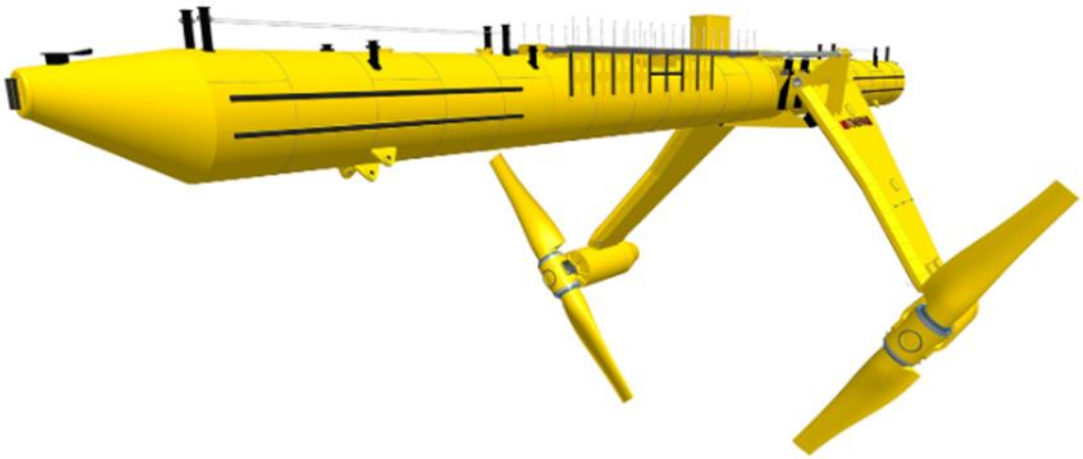

Towing and maintenance mode

© www.emec.org.uk

MAGALLANES

Magallanes ATIR

EMEC
THE EUROPEAN MARINE ENERGY CENTRE LTD

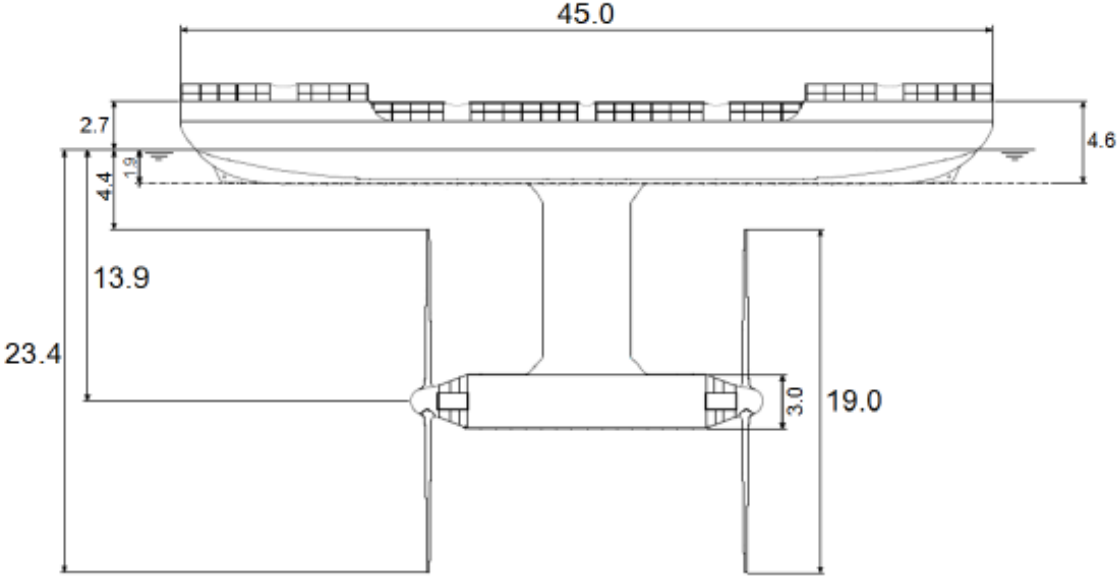

Figure 4-1 – ATIR overall dimensions

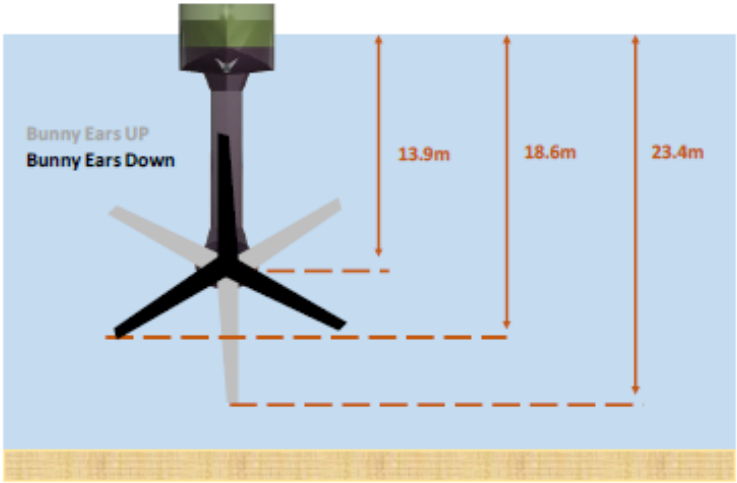

© www.emec.org.uk

OPEN HYDRO

openhydro
a DCNS company
Offshore Tidal Research
& Development

ATLANTIS

TOCARDO

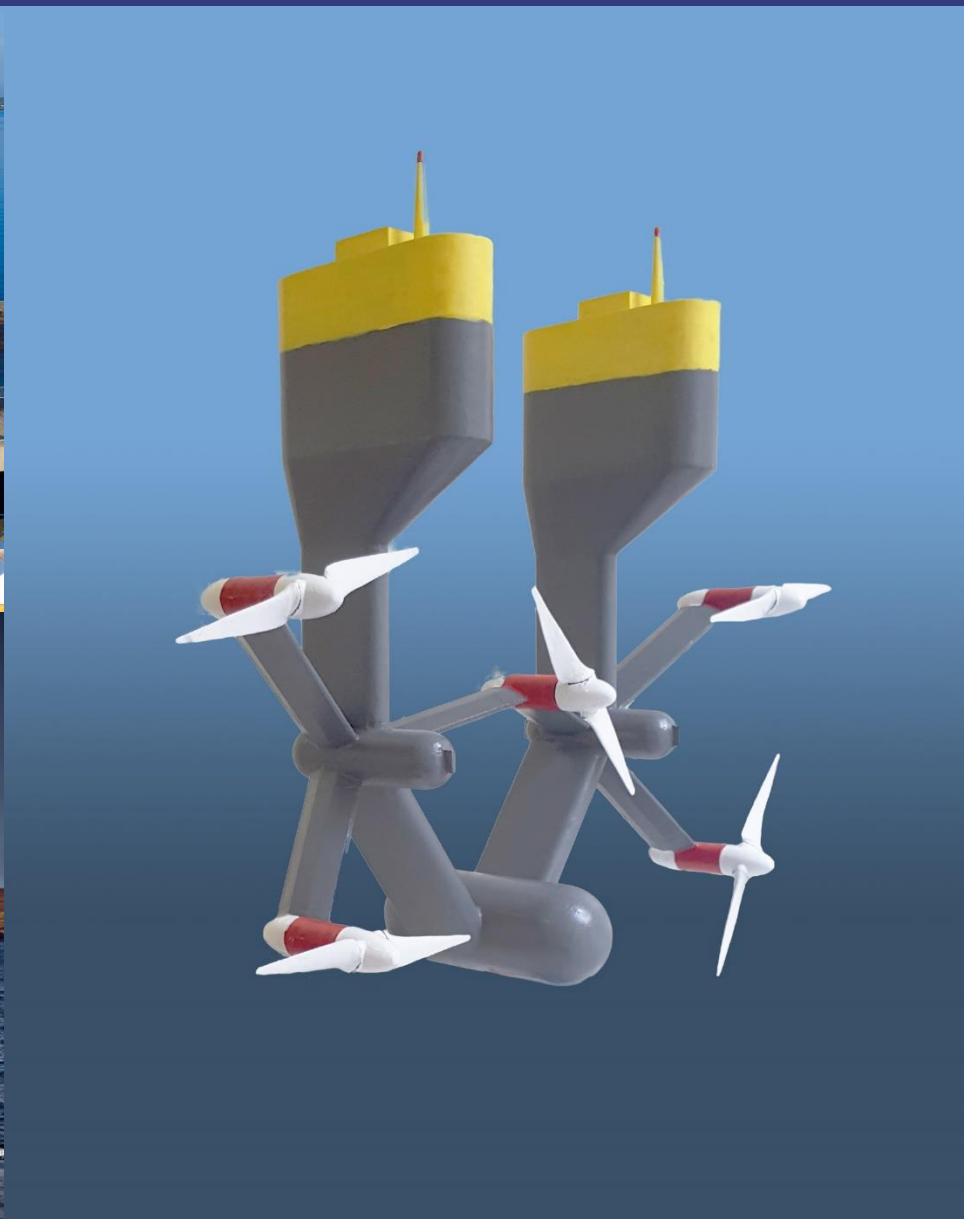

Cable handling

EMEC
THE EUROPEAN MARINE ENERGY CENTRE LTD

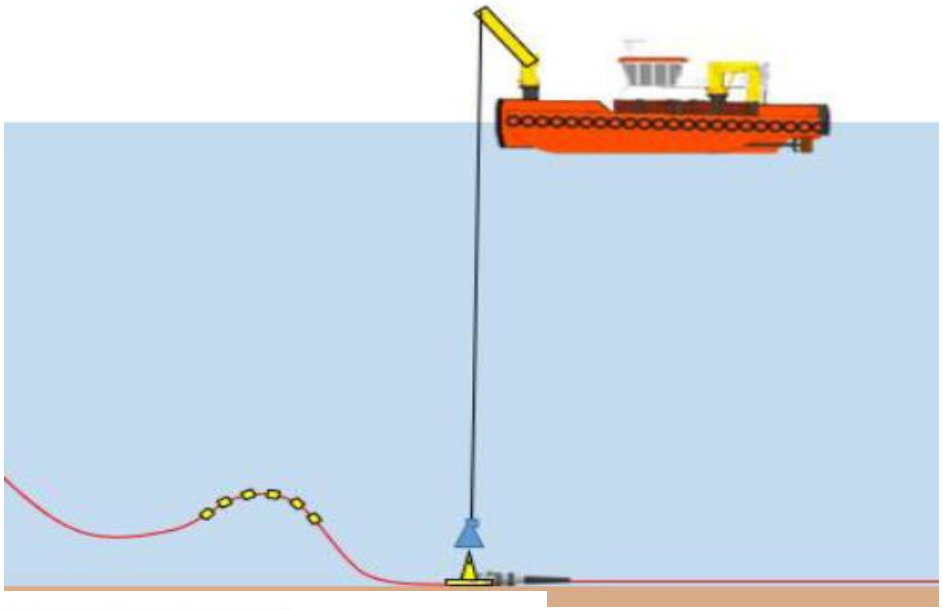

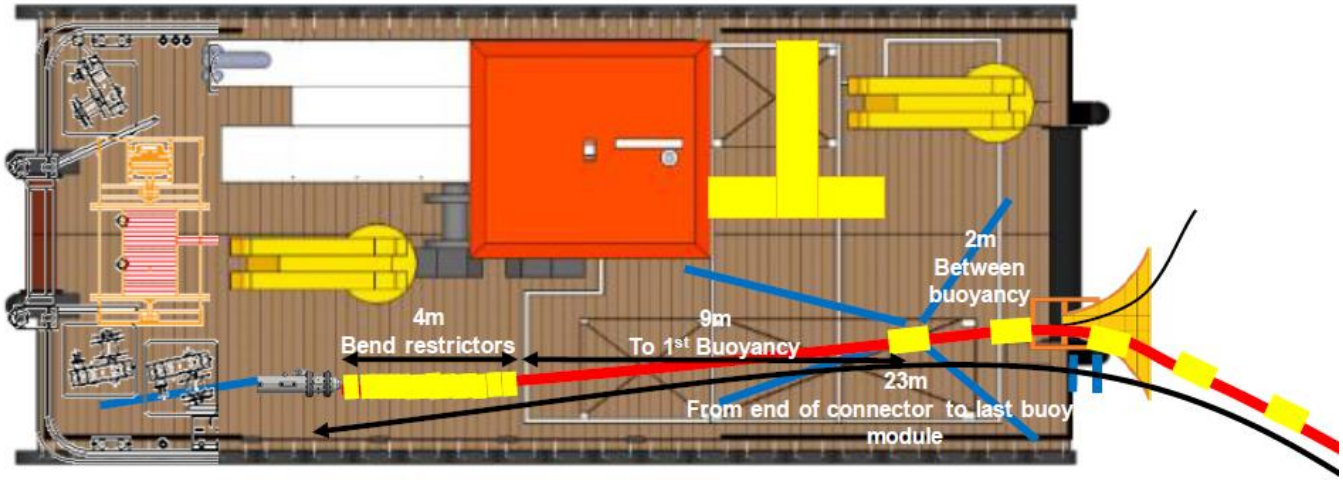

© www.emec.org.uk